Semi-rotary drive DRVS

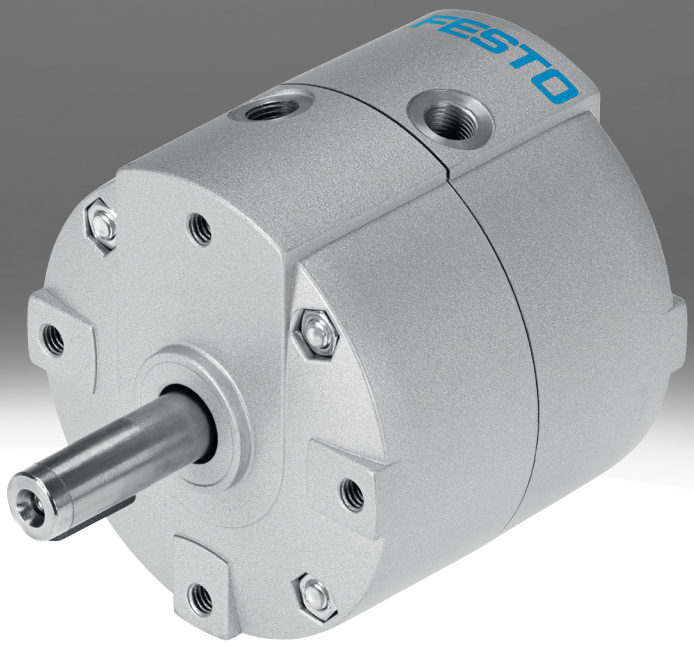

Characteristics

At a glance

Link drvs

- Double-acting semi-rotary drive with vane
- Lighter than other semi-rotary drives
- Modern and compact design
- Fixed swivel angle
- The swivel angle can be adjusted with the help of accessories
- Housing protected against splash water and dust
- No metallic fixed stop

Diagrams

Link drvs

The diagrams shown in this document are also available online. These can be used to display precise values.

Nominal swivel angle [°]

- [90] 90°
- [180] 180°
- [270] 270°

Cushioning

End-position cushioning has the following functions:

- Reduces kinetic energy in the end positions
- Avoids vibrations
- Reduces noise generation

[P]	Elastic cushioning rings/plates on both sides

The drive is fitted with elastic polymer end-position cushioning.
Benefits:

- No adjustment required
- Saves time

EU certification

[EX4]	II 2GD

- ATEX category for gas II 2G
- Ex ignition protection type for gas Ex h IIC T4 Gb X
- ATEX category for dust II 2D
- Ex ignition protection type for dust Ex h IIIC T120°C Db X
- Explosion-proof ambient temperature range 0°C ≤ Ta ≤ +60°C

Type code

001	Series	
DRVS	Semi-rotary drive, double-acting	

002	Size [mm]	
6	6	
8	8	
12	12	
16	16	
25	25	
32	32	
40	40	

003	Nominal swivel angle [°]	
90	90 deg	
180	180 deg	
270	270 deg	

004	Cushioning	
P	Elastic cushioning rings/plates on both sides	

005	EU certification	
	None	
EX4	II 2GD	

Datasheet

General technical data

Size	6	8	12	16	25	32	40
Design	Vane						
Cushioning	Elastic cushioning rings/plates at both ends						
Type of mounting	Via female thread						
Mounting position	optional						
Nominal swivel angle [°]	90, 180		90, 180, 270				
Cushioning angle	0.5 deg						
Repetition accuracy	1 deg						

Swivel frequency

Size	6		8		12			16			25			32			40		
Nominal swivel angle [°]	90	180	90	180	90	180	270	90	180	270	90	180	270	90	180	270	90	180	270
Max. swivel frequency at 0.6 MPa (6 bar, 87 psi)	3 Hz						2 Hz	3 Hz		2 Hz	3 Hz		2 Hz	3 Hz		2 Hz	3 Hz		2 Hz

Operating and environmental conditions

Size	6	8	12	16	25	32	40
Operating medium	Compressed air to ISO 8573-1:2010 [7:4:4]						
Note on operating and pilot medium	Lubricated operation possible (in which case lubricated operation will always be required)						
Operating pressure	0.35 ... 0.8 MPa		0.25 ... 0.8 MPa		0.2 ... 0.8 MPa		
Operating pressure	3.5 ... 8 bar		2.5 ... 8 bar		2 ... 8 bar		
Operating pressure	50.75 ... 116 psi		36.25 ... 116 psi		29 ... 116 psi		
Ambient temperature [1]	0 ... 60°C						
Corrosion resistance class CRC [2]	1 - Low corrosion stress						

1) Note the operating range of the proximity switches
2) More information www.festo.com/x/topic/kbk

ATEX

Size [1]	6	8	12	16	25	32	40
ATEX category gas	II 2G						
Explosion ignition protection type for gas	Ex h IIC T4 Gb X						
ATEX category dust	II 2D						
Explosion ignition protection type for dust	Ex h IIIC T120°C Db X						
Explosion ambient temperature	0°C <= Ta <= +60°C						
CE mark (see declaration of conformity) [2]	To EU Explosion Protection Directive (ATEX)						
UKCA marking (see declaration of conformity)	To UK EX instructions						
Explosion protection certification outside the EU	EPL Db (GB) EPL Gb (GB)						

1) Note the ATEX certification of the accessories
2) Note the ATEX certification of the accessories

Weight – DRVS-6 ... 16

Size	6		8		12			16		
Nominal swivel angle [°]	90	180	90	180	90	180	270	90	180	270
Product weight	38 g		68 g		154 g	152 g	150 g	272 g	270 g	268 g

Weight – DRVS-25 ... 40

Size	25			32			40		
Nominal swivel angle [°]	90	180	270	90	180	270	90	180	270
Product weight	502 g	494 g	486 g	928 g	912 g	896 g	1,530 g	1,500 g	1,470 g

Datasheet

Materials

Size	6	8	12	16	25	32	40
Material housing	Anodised wrought aluminium alloy		Painted die cast aluminium				
Material drive shaft	High-alloy stainless steel			Nickel-plated steel			
Material seals	TPE-U(PU)						
Note on materials	RoHS-compliant						
LABS (PWIS) conformity	VDMA24364-B2-L						
Cleanroom class	Class 5 according to ISO 14644-1						

Forces and torques

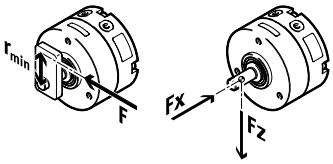

If the semi-rotary drives DRVS are used without a stop system or the mass moment of inertia is exceeded, external stops must be used. A minimum radius relative to the output shaft (rmin) must be observed. The stop force must not exceed the maximum force.

rmin = Minimum radius to the output shaft
F = Stop force
Fx = Axial force
Fz = Radial force

Size	6	8	12	16	25	32	40
Theoretical torque at 0.6 MPa (6 bar, 87 psi)	0.15 Nm	0.35 Nm	1 Nm	2 Nm	5 Nm	10 Nm	20 Nm
Permissible stop radius	10 mm		15 mm	17 mm	21 mm	28 mm	40 mm
Max. stop force	15 N	30 N	90 N	160 N	320 N	480 N	650 N
Max. axial force [1]	10 N		20 N	25 N	40 N	75 N	120 N
Max. radial force [2]	15 N	20 N	25 N	30 N	60 N	200 N	350 N
Permissible mass moment of inertia	0.00065 kgm2	0.0013 kgm2	0.005 kgm2	0.01 kgm2	0.012 kgm2	0.02 kgm2	0.035 kgm2

1) The axis of rotation and the centre of the drive shaft are the point of reference for the forces
2) The axis of rotation and the centre of the drive shaft are the point of reference for the forces

Mass moment of inertia J as a function of swivel time t – DRVS-6

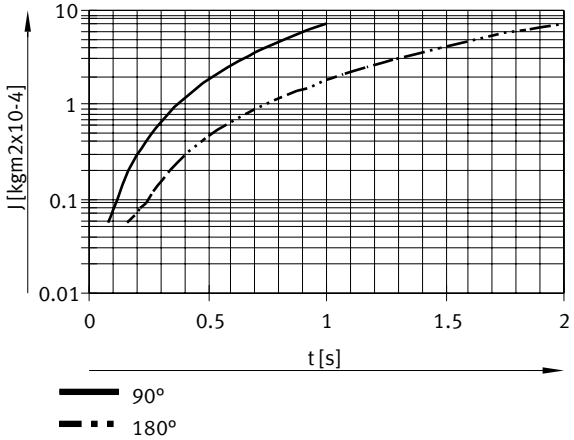

Datasheet

Mass moment of inertia J as a function of swivel time t – DRVS-8

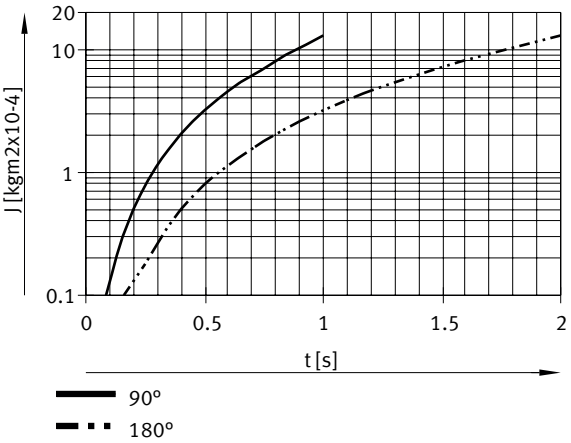

Mass moment of inertia J as a function of swivel time t – DRVS-12

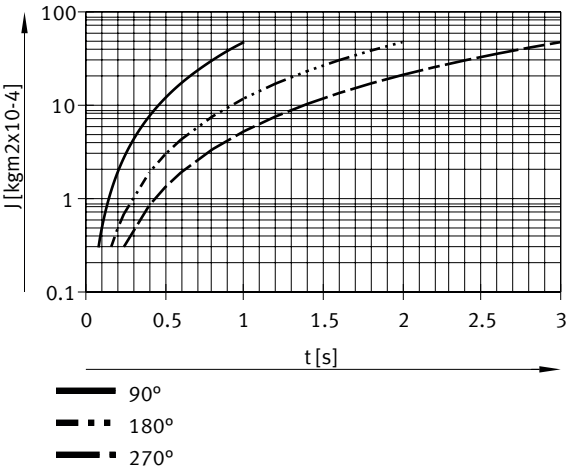

Mass moment of inertia J as a function of swivel time t – DRVS-16

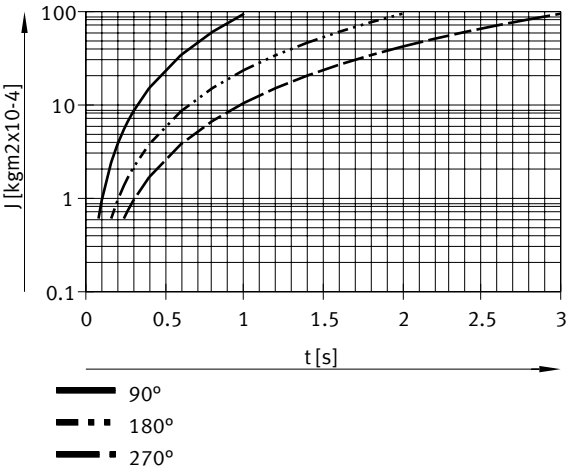

Datasheet

Mass moment of inertia J as a function of swivel time t – DRVS-25

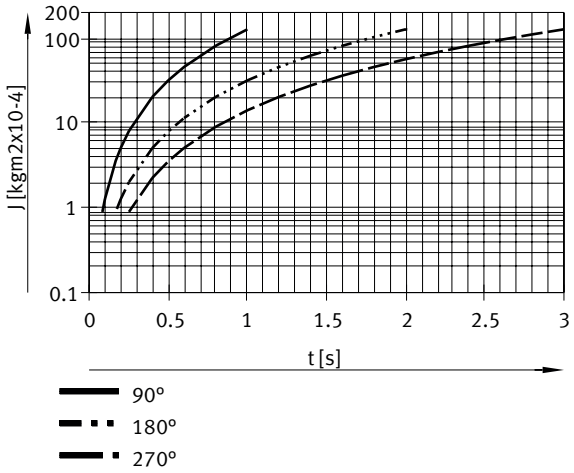

Mass moment of inertia J as a function of swivel time t – DRVS-32

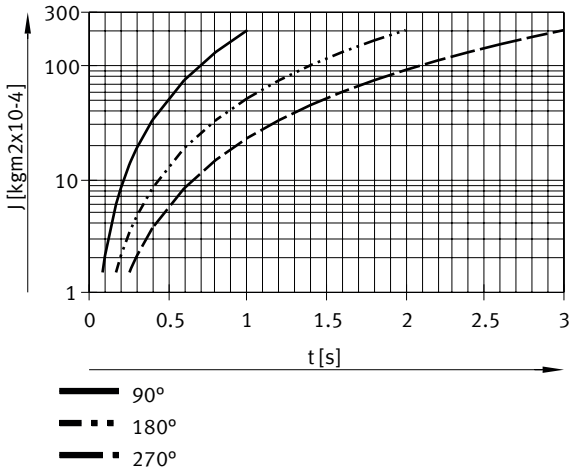

Mass moment of inertia J as a function of swivel time t – DRVS-40

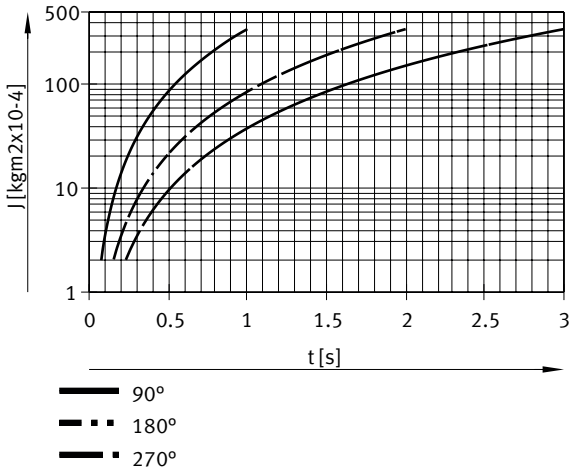

Dimensions

Dimensions – DRVS-6 ... 8 Download CAD data www.festo.com

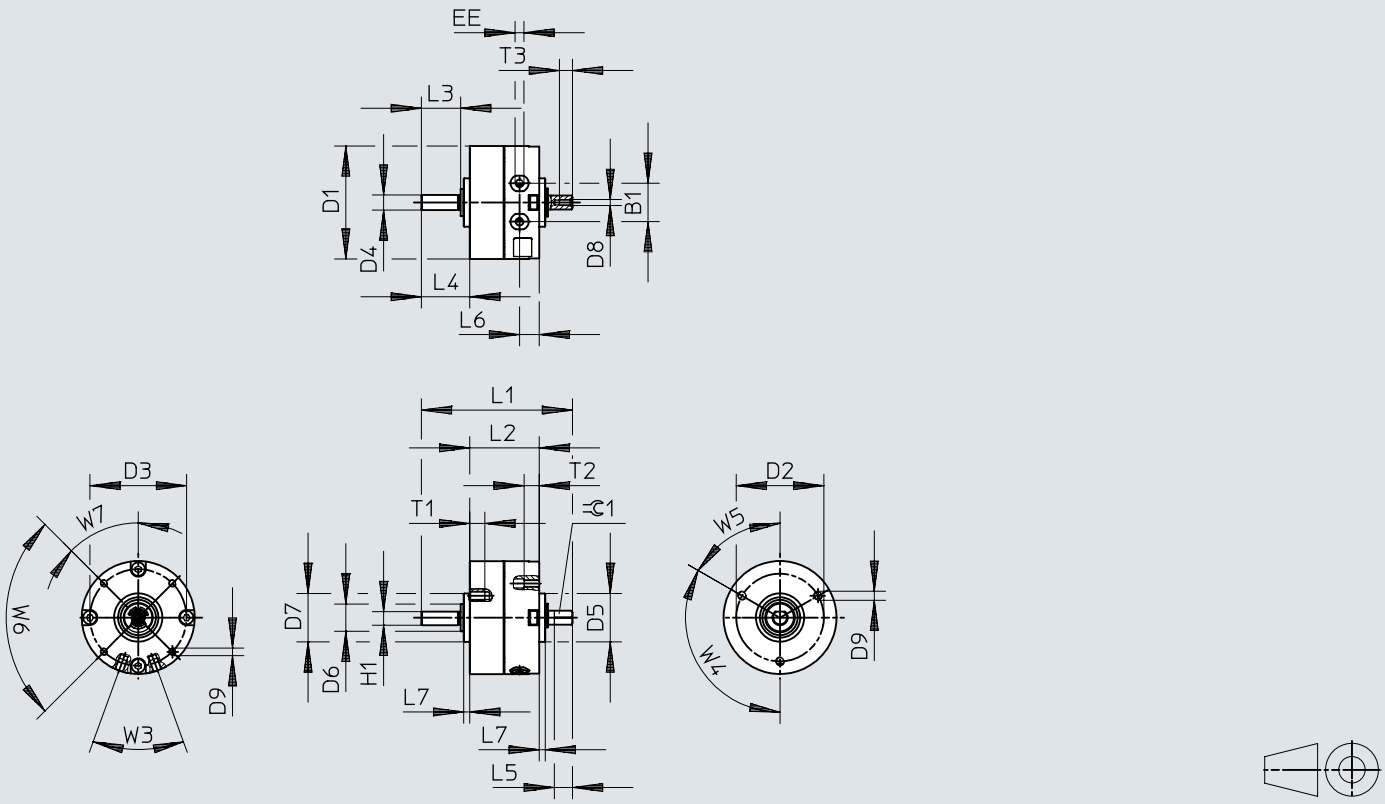

	B1	D1 ø ±0,2	D2 ø ±0,1	D3 ø ±0,1	D4 ø g7	D5 ø f8	D6 ø	D7 ø f8	D8	D9
DRVS-6	10	29,4	24	25	4	14	8	14	M2	M3
DRVS-8	12,8	37,4	29	32	5	16	9	16	M2	M3

	D10	EE	H1 –0,2	L1	L2	L3	L4	L5 –0,2	L6	L7
DRVS-6	M2	M3	3,5	43	21	10	13	5	6	2
DRVS-8	M2,5	M3	4,5	50	23	13	16	6	6,5	2

	T1 +0,5	T3 +0,5	W3	W4	W5	W6	W7	=C 1
DRVS-6	5	3,5	40°	120°	60°	90°	45°	3
DRVS-8	5	4,3						3,5

Dimensions

Dimensions – DRVS-12 ... 16 Download CAD data www.festo.com

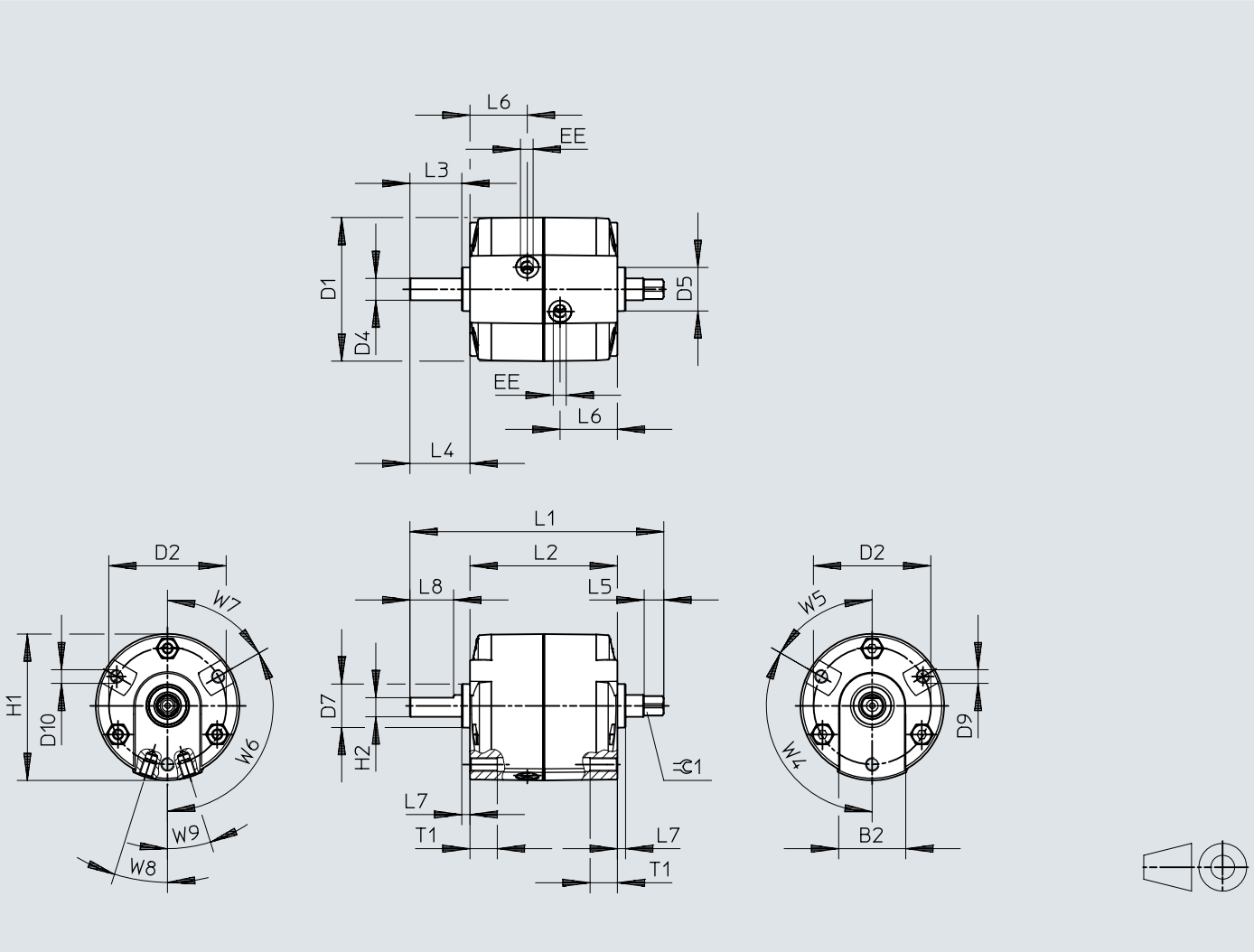

	B2	D1 ø	D2 ø ±0,2	D4 ø g7	D5 ø ±0,1	D7 ø ±0,1	D9	EE	H1
DRVS-12	24	45,5	36	6	14	14	M4	M5	46,3
DRVS-16	24,5	52,7	43	8	16	16	M5	M5	53,7

	H2 ±0,1	L1	L2 +0,6/–0,2	L3	L4	L5	L6	L7 +0,1/–0,1	L8 +0,4
DRVS-12	5	73+0,2/–0,1	40,5	17	20+0,4/–0,6	9±0,1	14,8	3	14
DRVS-16	7	93+0,2/–0,2	54	19	22+0,4/–0,7	7,2+0,1	21	3	16

	T1	W4	W5	W6	W7	W8	W9	⌯ 1
DRVS-12	8	120°	60°	120°	60°	19,5°	19,5°	$4{,}5_{h11}$
DRVS-16	10					17,5°	17,5°	$6_{-0,1}$

Dimensions

Dimensions – DRVS-25 Download CAD data www.festo.com

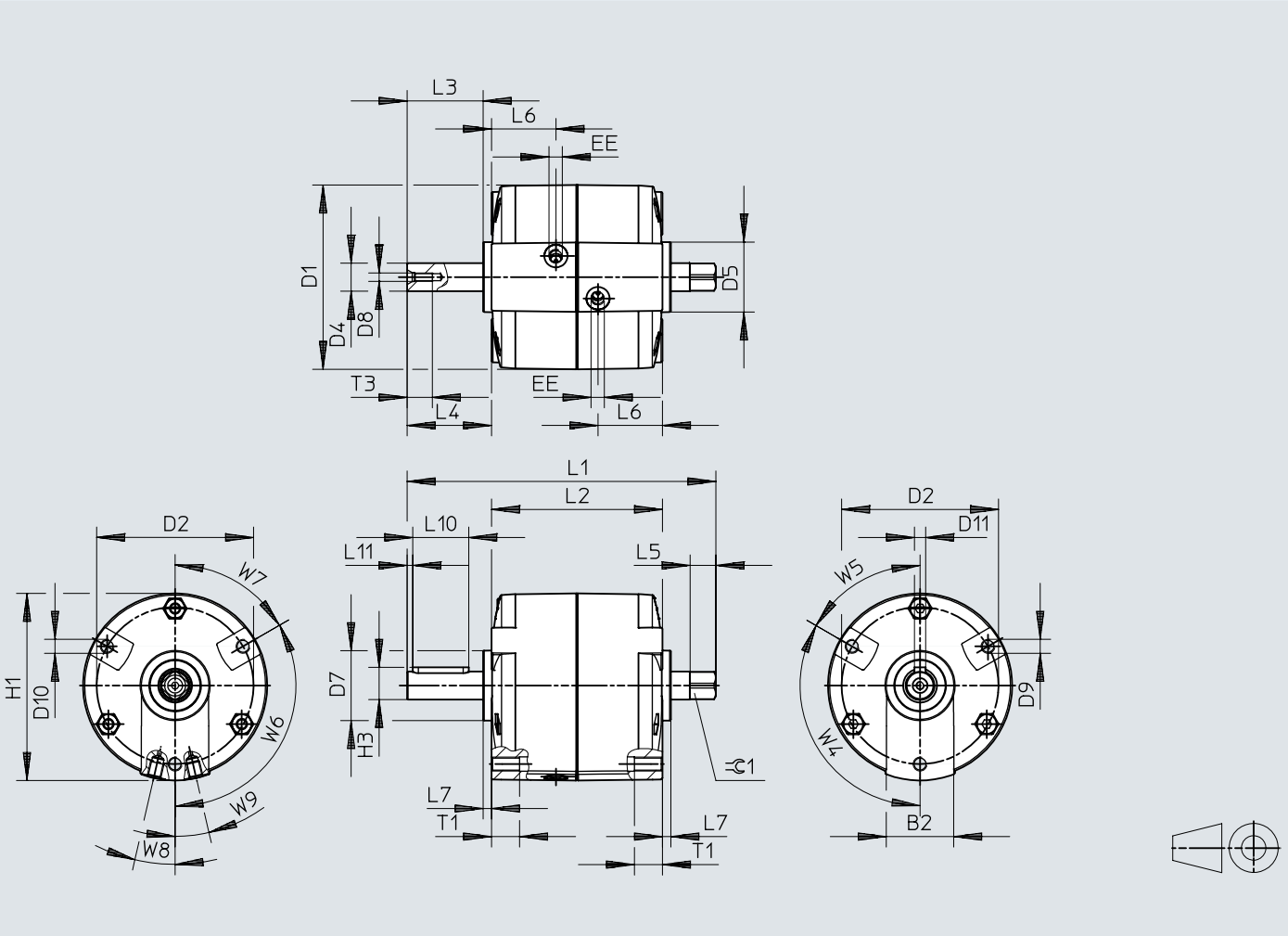

	B2	D1 ø	D2 ø ±0,2	D4 ø g7	D5 ø ±0,1	D7 ø ±0,1	D8	D9
DRVS-25	24	65,7	56	10	25	25	M3	M5

	D11 N9	EE	H1	H3 –0,2	L1 +0,2/–0,3	L2 +0,3/–0,2	L3	L4 +0,3/–0,4
DRVS-25	4	M5	66,7	11,5	110,2	61	27,1	30,1

	L5	L6	L7 +0,1/–0,1	L10 +0,1	L11	T1	T3 +3	W4
DRVS-25	9,2	23	3	20	2	10	9	120°

	W5	W6	W7	W8	W9	⌯ 1 –0,1	1)
DRVS-25	60°	120°	60°	13°	13°	8	A4x4x20

1) Feather key included in the scope of delivery

Dimensions

Dimensions – DRVS-32 ... 40 Download CAD data www.festo.com

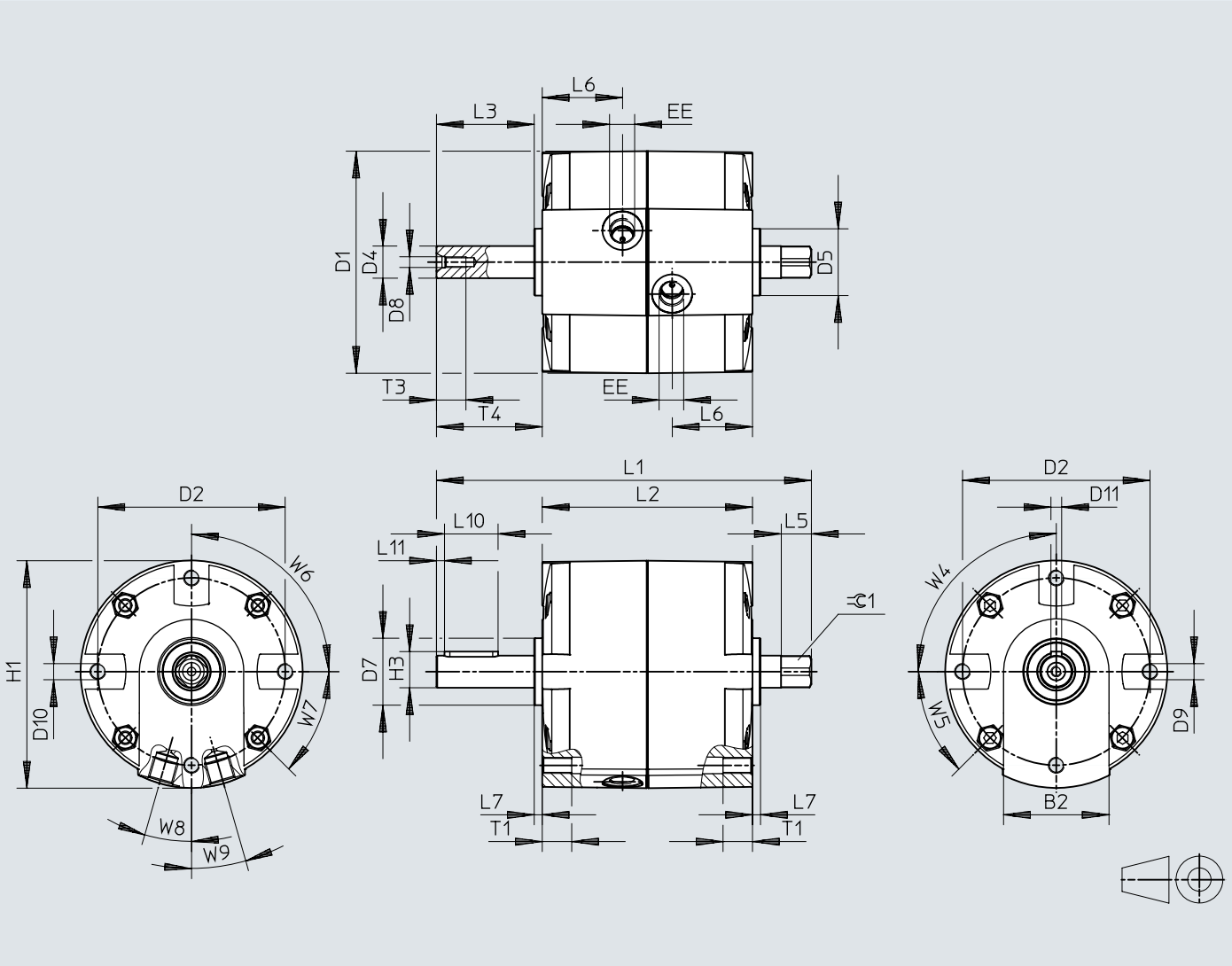

Dimensions

	B2	D1 ø	D2 ø ±0,2	D4 ø g7	D5 ø ±0,1	D7 ø ±0,1	D8	D9
DRVS-32	39	83	70	12	25	25	M4	M6
DRVS-40	42	100,1	87	17	30	30	M5	M8

	D11 N9	EE	H1	H3 –0,2	L1 +0,2/–0,3	L2	L3	L4 +0,3/–0,6
DRVS-32	4	G1/8	85	13,5	140	$78{,}5^{+0{,}5/-0{,}1}$	36,5	39,5
DRVS-40	5	G1/8	102,6	19	170	$93^{+0{,}4}$	50,5	53,5

	L6	L7	L10	L11	T1	T3 +3	W4	W5
DRVS-32	30	$3^{+0{,}1/-0{,}2}$	$20^{+0{,}1}$	3	11	11	90°	45°
DRVS-40	37	$3^{+0{,}2}$	$36{,}1^{+0{,}3}$	5	13^{+3}	13		

	W6	W7	W8	W9	⌯ 1 h11	1)
DRVS-32	90°	45°	16°	16°	10	A4x4x20
DRVS-40			14,5°	14,5°	13	A5x5x36

1) Feather key according to DIN 6885 included in the scope of delivery

Dimensions

Dimensions – DRVS – shaft position Download CAD data www.festo.com

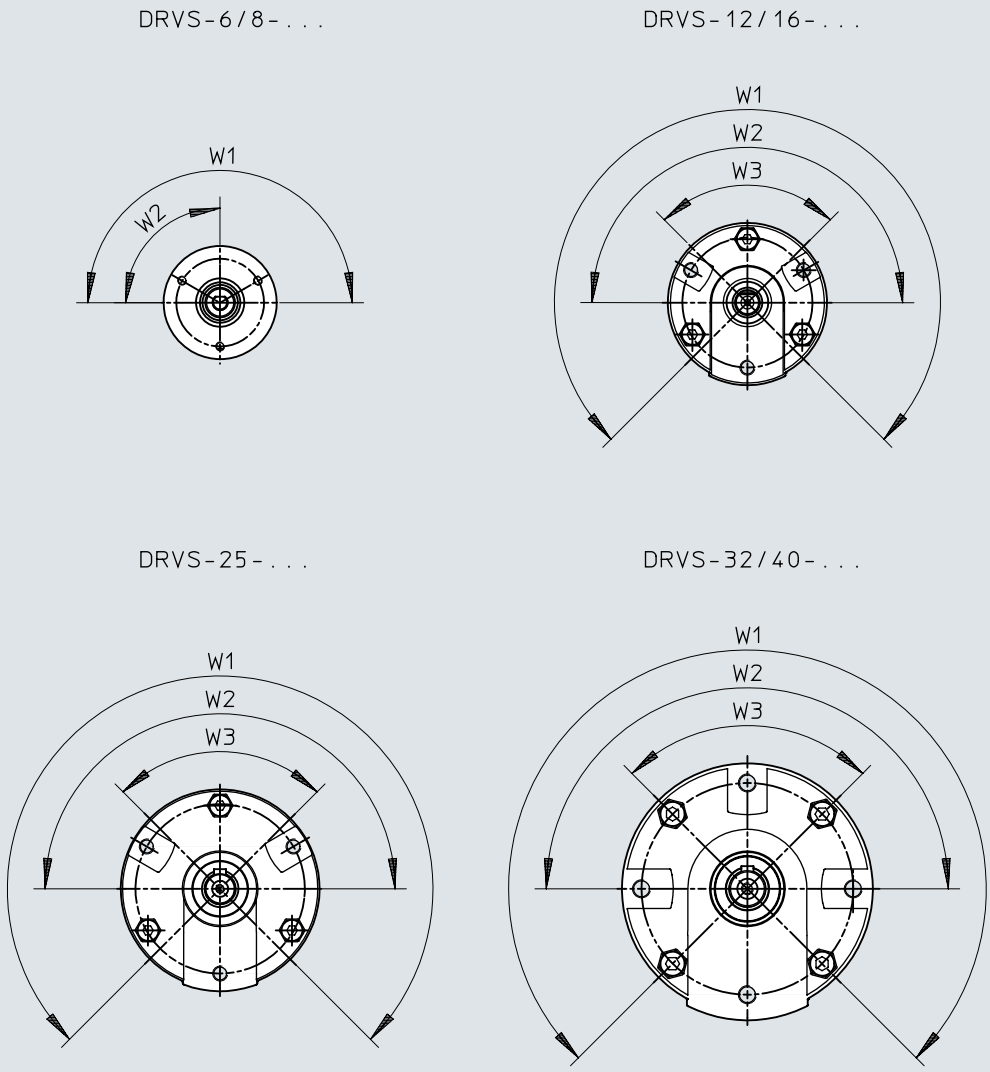

	W1	W2	W3
DRVS-6 ... 8	180° +5	90° +5	–
DRVS-12 ... 40	270°	180°	90°

Dimensions

Dimensions – Foot mounting DAMH-Q12-6 ... 8 Download CAD data www.festo.com

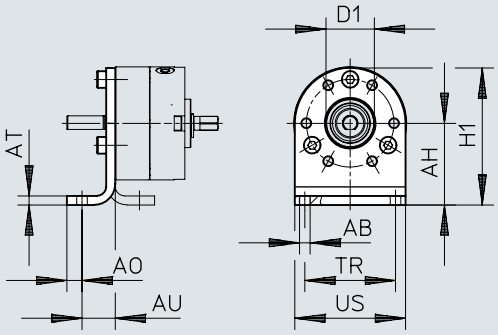

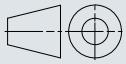

[1] For DRVS-6 ... 8, the foot mountings can only be fitted at the front.

	AB ⌀ H13	AH	AO	AT	AU	D1 ⌀	H1	TR	US
DAMH-Q12-6	3,5	22±0,2	4	3	11	$14^{+0,05}$	36,8+0,5/–0,3	20	29,6+0,3/–0,2
DAMH-Q12-8	3,5	27±0,2	5	3	11	$16^{+0,05}$	45,3±0,4	30	36,6±0,3

Dimensions

Dimensions – Foot mounting DAMH-Q12-12 ... 25 Download CAD data www.festo.com

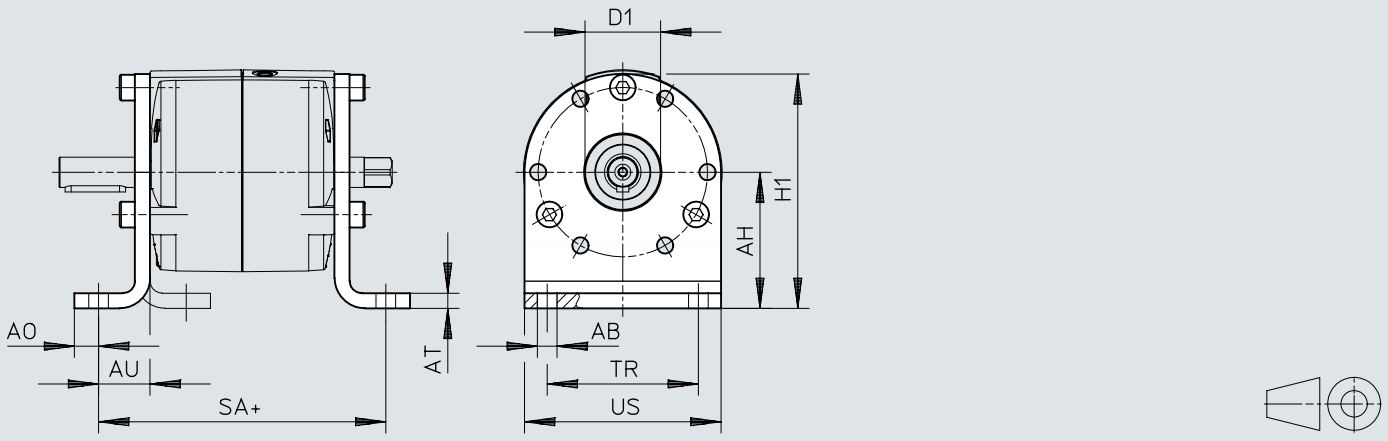

	AB ⌀ H13	AH	AO	AT	AU	D1 ⌀	H1	SA	TR	US
DAMH-Q12-12	5,5	30±0,2	6	4	14	14^{H10}	52+0,5/–0,3	68,5	30	$44_{-0,5}$
DAMH-Q12-16	5,5	35±0,25	7	4	15	16^{H10}	61+0,5/–0,3	84	40	$52_{-0,5}$
DAMH-Q12-25	6,5	45±0,25	8	5	17	25^{H10}	77,5+0,5/–0,3	95	50	$65_{-0,5}$

Dimensions

Dimensions – Foot mounting DAMH-Q12-32 ... 40

Download CAD data www.festo.com

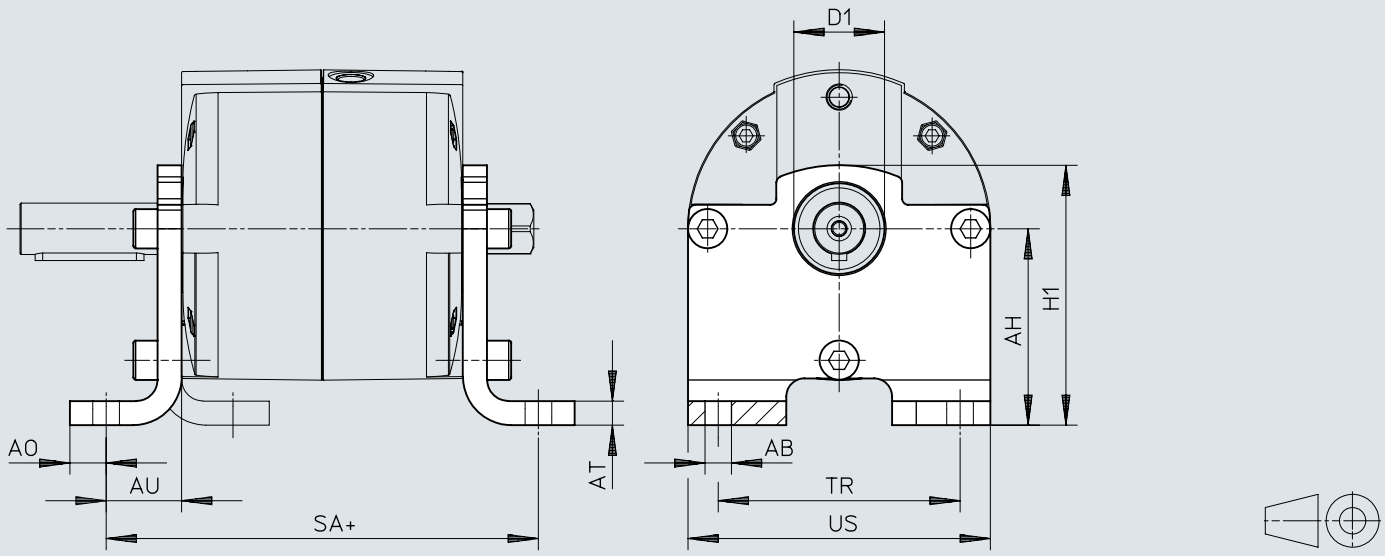

	AB ø H13	AH	AO	AT	AU	D1 ø	H1	SA	TR	US
DAMH-Q12-32	8,8	55±0,3	11	6	21	25^{H10}	73±0,5	122,5	60	$81{,}5_{-0{,}5}$
DAMH-Q12-40	8,8	65±0,3	12	8	25	30^{H10}	86±0,5	143	80	100±0,3

Dimensions

Dimensions – Foot mounting DAMH-Q12 – Mounting variants in conjunction with supply ports

Download CAD data www.festo.com

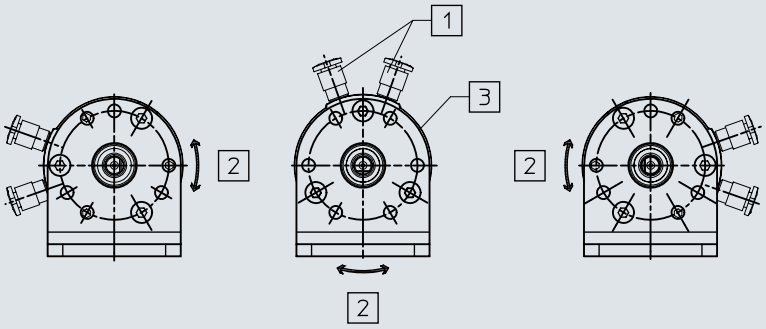

[1] Compressed air supply ports (three mounting variants are possible in combination with the foot mounting DAMH)
[2] Mid-position of the swivel angle
[3] Shaft position in standard position (position swivel angle)

Dimensions

Dimensions – Flange mounting DAMF-Q12-12 ... 25 Download CAD data www.festo.com

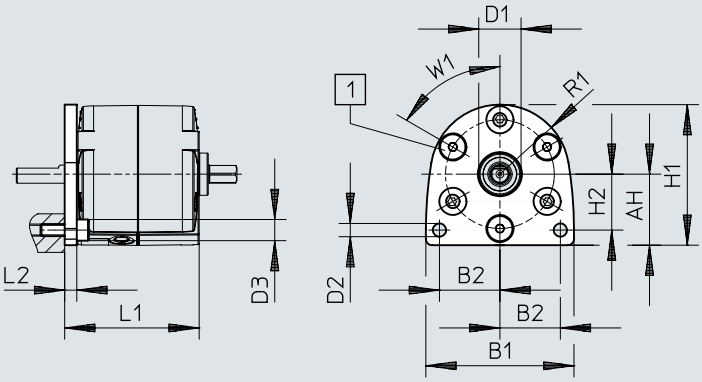

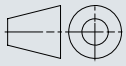

[1] Compressed air ports
[2] Mounting in combination with compressed air supply ports for DRVS-12 ... 25 possible every 60°

	AH	B1	B2	D1 ø H10	D2 ø H13	D3 ø max.	H1	H2	L1	L2	R1	W1
DAMF-Q12-12	23,5±0,2	49±0,4	20	14	4,4	8,5	46,5+0,4/−0,3	18,5	44,5	4	23	60°
DAMF-Q12-16	28±0,2	59±0,4	23	16	5,4	8,5	56±0,4	20,5	58	4	28	60°
DAMF-Q12-25	34,5±0,2	74±0,4	30	25	6,5	10	69±0,4	23	66	5	34,5	60°

Dimensions

Dimensions – Flange mounting DAMF-Q12-32 ... 40 Download CAD data www.festo.com

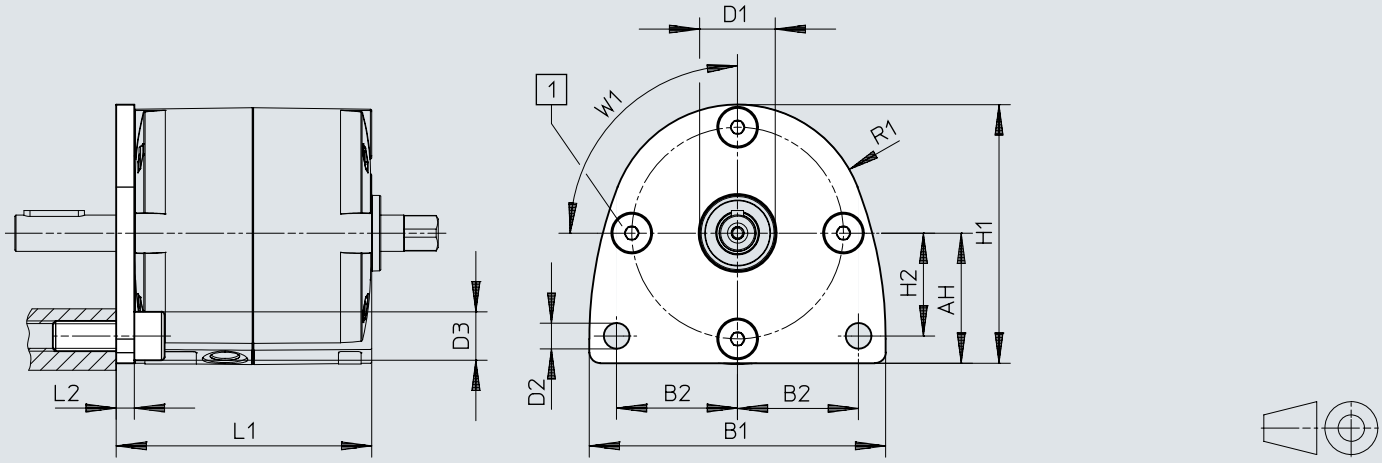

[1] Compressed air ports
[2] Mounting in combination with compressed air supply ports for DRVS-32 ... 40 possible every 90°

	AH	B1	B2	D1 ø H10	D2 ø H13	D3 ø max.	H1	H2	L1	L2	R1	W1
DAMF-Q12-32	43±0,2	98±0,5	40	25	8,5	16	85,5+0,5/–0,4	34	84,5	6	42,5	90°
DAMF-Q12-40	53+0,3/–0,2	120±0,5	50	30	8,5	18	106+0,5/–0,3	40	99	6	53	90°

Dimensions

Dimensions – Push-on flange FWSR

Download CAD data www.festo.com

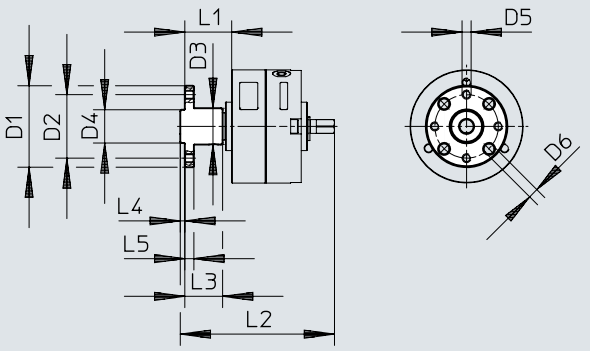

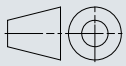

	D1 ø	D2 ø	D3 ø +0,4	D4 ø	D5	D6 ø H13	L1	L2	L3	L4	L5
FWSR-6	23	16	10	8_{g7}	M3	3,4	13,5±0,7	45	10,5	$1{,}5_{-0{,}2}$	3
FWSR-8	27	21	12	11_{g7}	M3	3,4	15,5±0,7	51	12,5	$1{,}5_{-0{,}2}$	3

Dimensions

Dimensions – Push-on flange DARF-Q12-12 ... 16

Download CAD data www.festo.com

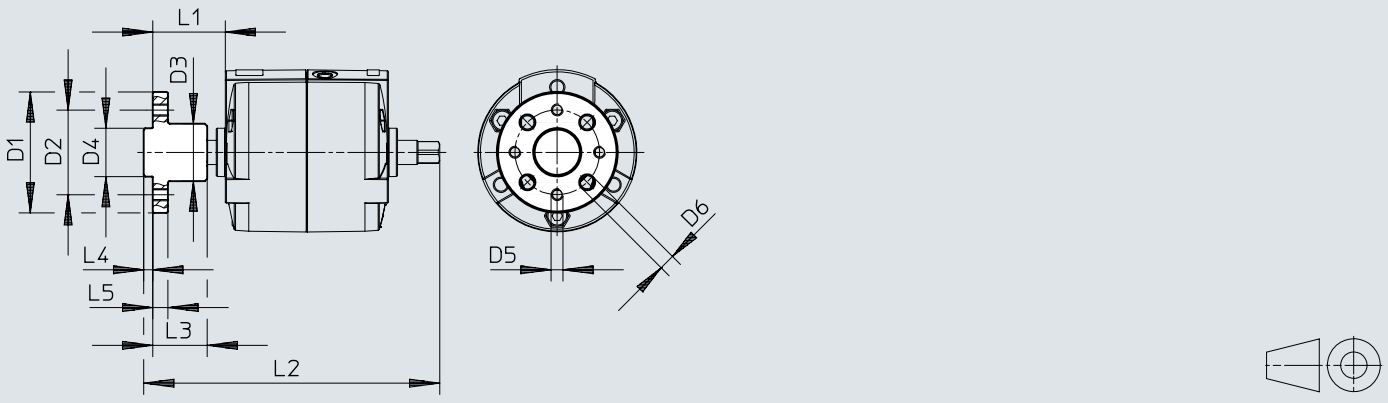

	D1 ø	D2 ø	D3 ø +0,4	D4 ø	D5	D6 ø H13	L1	L2	L3	L4	L5
DARF-Q12-12	$35_{-0,5}$	25	16	14_{f8}	M3	3,4	21+0,5/–0,7	77	16	$3_{-0,1}$	3
DARF-Q12-16	$40_{-0,5}$	28	19	16_{f8}	M4	4,5	23+0,5/–0,8	97	18	$3_{-0,1}$	5

Dimensions

Dimensions – Push-on flange DARF-Q12-25 ... 40

Download CAD data www.festo.com

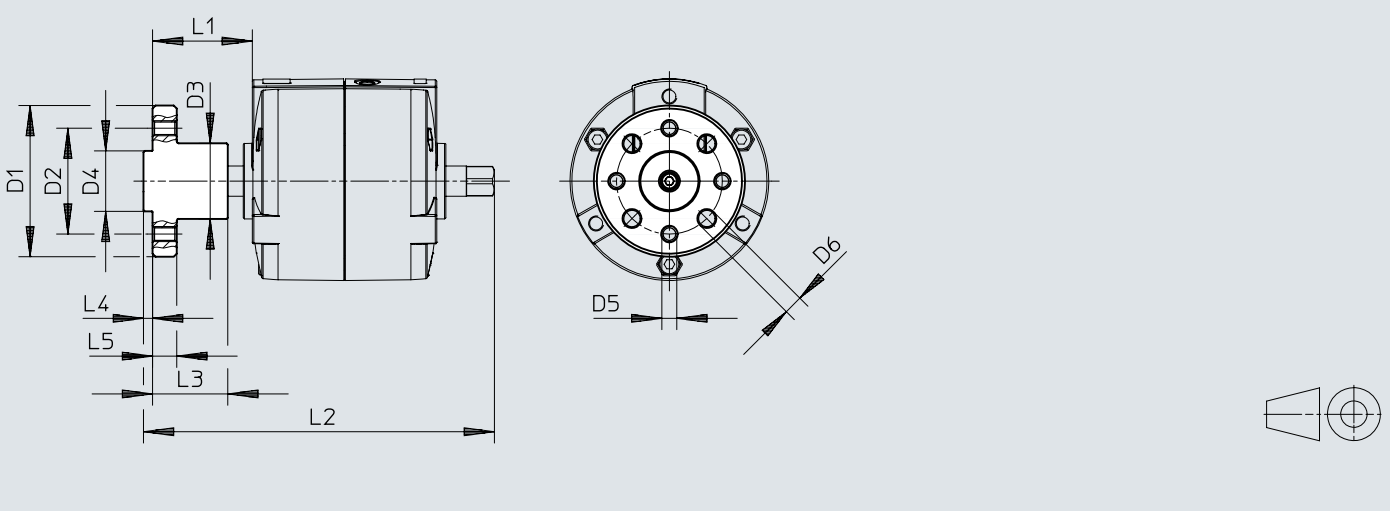

	D1 ø	D2 ø	D3 ø +0,4	D4 ø	D5	D6 ø H13	L1	L2	L3	L4	L5
DARF-Q12-25	$50_{-0,5}$	35	25	20_{f8}	M5	5,5	$33^{+0,4/-0,5}$	116,1	24,9	$3_{-0,1}$	8
DARF-Q12-32	$60_{-0,5}$	45	25	28_{f8}	M6	6,5	$42,6^{+0,4/-0,7}$	147,1	26,1	$4_{-0,1}$	10
DARF-Q12-40	$70_{-0,5}$	54	30	36_{f8}	M8	9	$57,1^{+0,4/-0,7}$	178,6	44,6	$5_{-0,1}$	11

Dimensions

Dimensions – Stop kit KSM Download CAD data www.festo.com

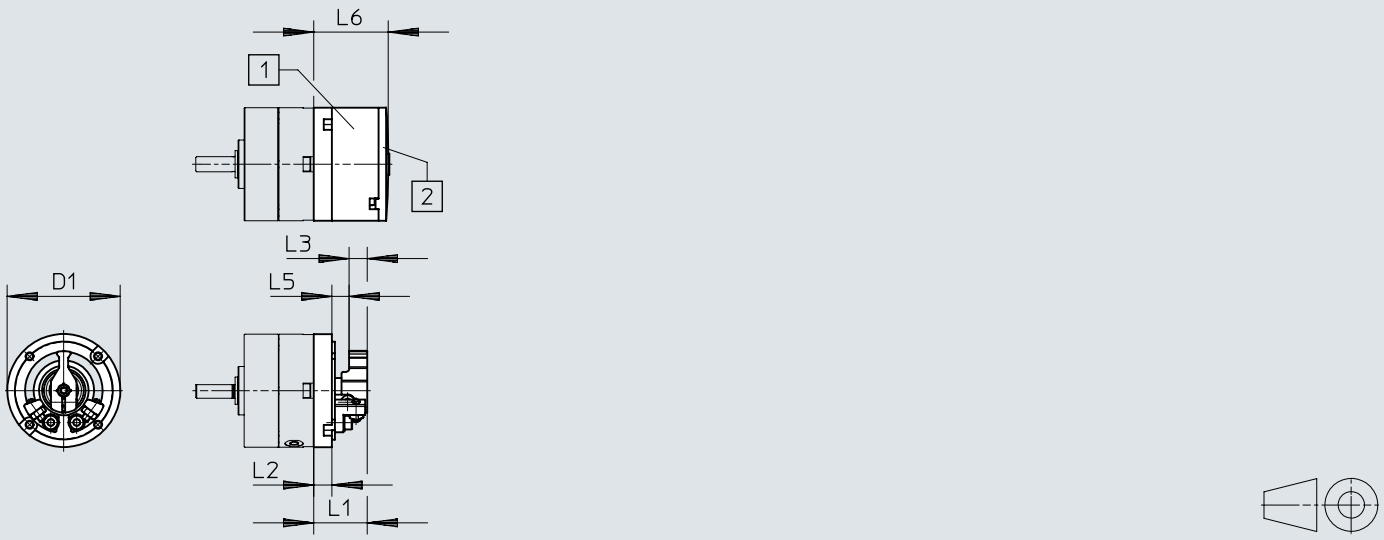

[1] Cover
[2] Cover plate

	D1 ø ±0,2	L1 +0,4	L2 +0,3	L3	L5	L6 +0,2/–0,6
KSM-6	29,4	11,2	3,2	5	2,5	17,8
KSM-8	37,4	17	6	6	5,7	24,9

Dimensions

Dimensions – Mounting kit WSM Download CAD data www.festo.com

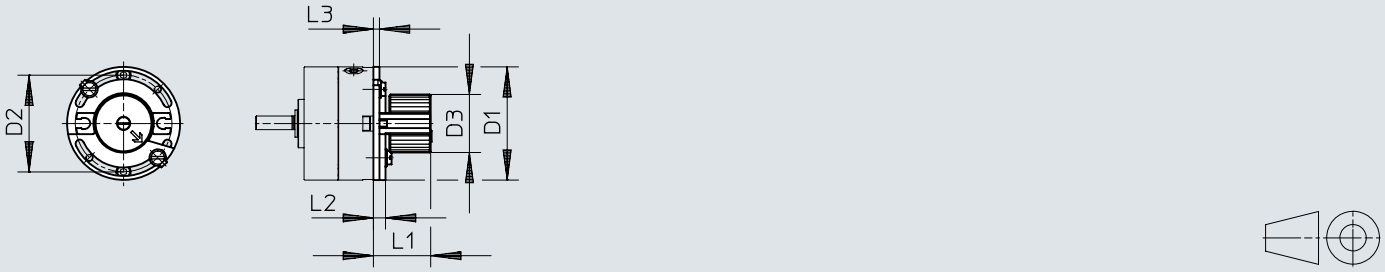

	D1 ø ±0,2	D2 ø ±0,2	D3 ø	L1 ±1	L2	L3
WSM-6-SME-10	29,4	25	17,3	19,5	4	2
WSM-8-SME-10	37,4	32	19,3	19,5	4	2

Dimensions

Dimensions – Position sensor SRBS-Q12-6 ... 8 Download CAD data www.festo.com

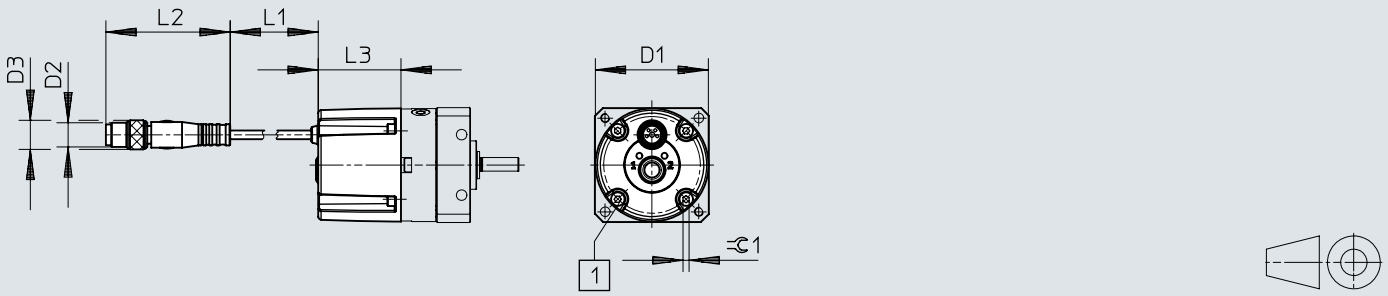

[1] Retaining screw

	D1 ø	D2	D3 ø	L1	L2	L3	1
SRBS-Q12-6-E270-EP-1-S-M8	29,4	M8x1[1]	9,6	300	41,1	25,4	1,5
SRBS-Q12-8-E270-EP-1-S-M8	32					27,4	2

1) Plug, 4-pin

Dimensions

Dimensions – Position sensor SRBS-Q12-12 ... 25 Download CAD data www.festo.com

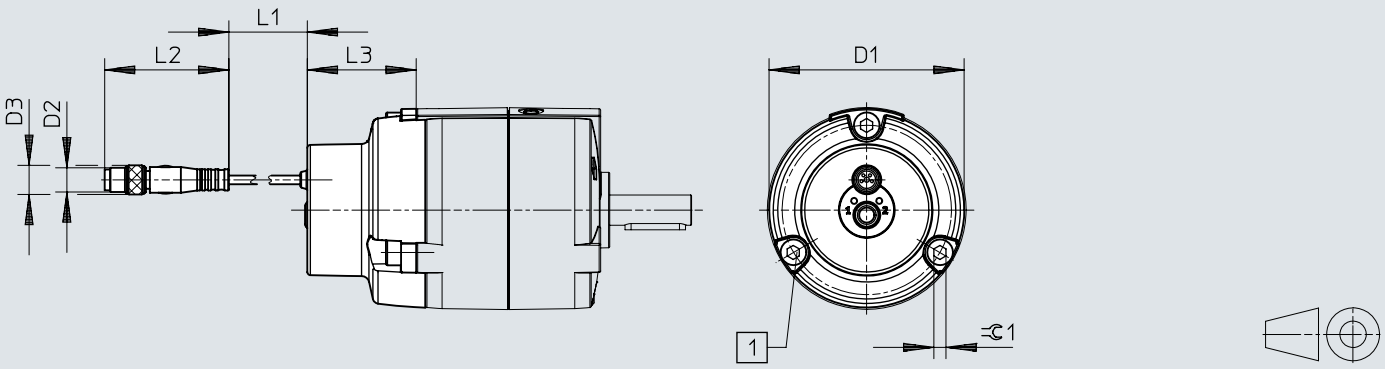

[1] Retaining screw

	D1 ø	D2	D3 ø	L1	L2	L3	1
SRBS-Q12-12-E270-EP-1-S-M8	44,6	M8x1[1]	9,6	300	41,1	29,4	3
SRBS-Q12-16-E270-EP-1-S-M8	51,6					33,9	4
SRBS-Q12-25-E270-EP-1-S-M8	64,5					36	4

1) Plug, 4-pin

Dimensions

Dimensions – Position sensor SRBS-Q12-32 ... 40 Download CAD data www.festo.com

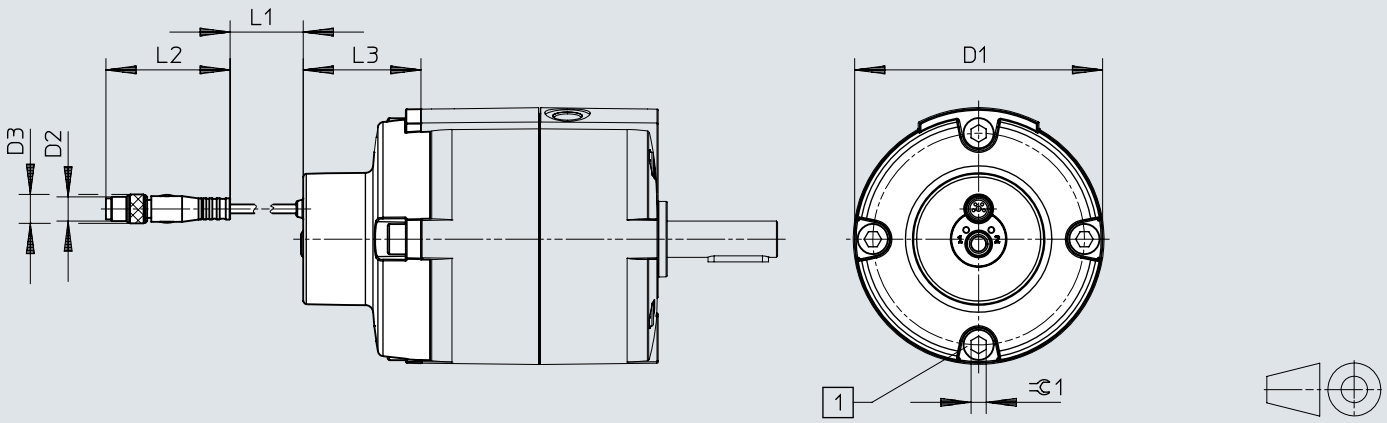

[1] Retaining screw

	D1 ø	D2	D3 ø	L1	L2	L3	⊂1
SRBS-Q12-32-E270-EP-1-S-M8	81,3	M8x1[1]	9,6	300	41,1	38,9	5
SRBS-Q12-40-E270-EP-1-S-M8	98,3					40,4	6

1) Plug, 4-pin

Dimensions

Dimensions – Stop kit DADP-ES-Q12-12 Download CAD data www.festo.com

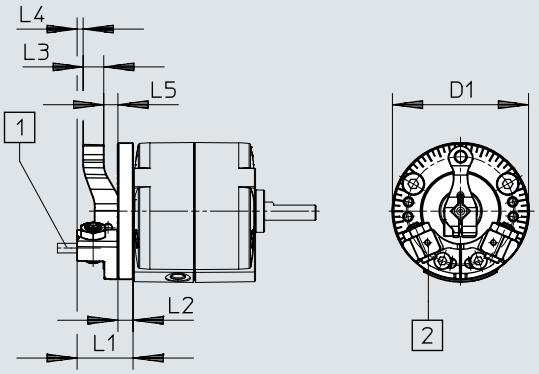

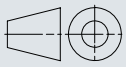

[1] Stop
[2] Mounting thread for sensor bracket

	D1 ø	L1	L2	L3	L4	L5
DADP-ES-Q12-12	45	18,5	5	6,8	2	4,7

Dimensions

Dimensions – Stop kit DADP-ES-Q12-16 ... 25 Download CAD data www.festo.com

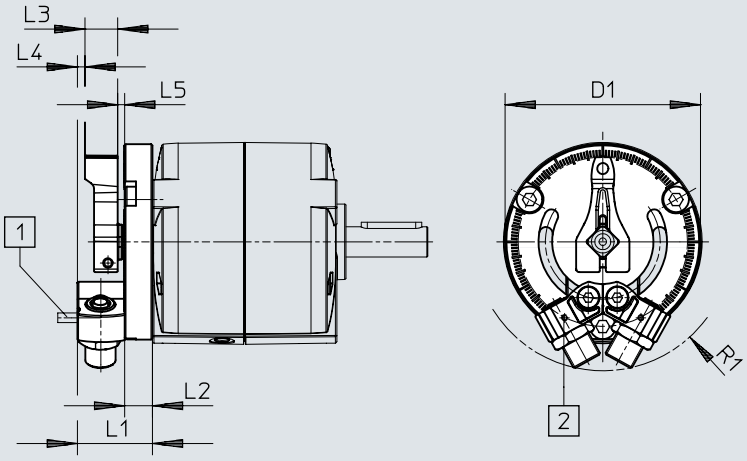

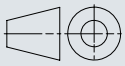

[1] Stop
[2] Mounting thread for sensor bracket

	D1 ø	L1	L2	L3	L4	L5	R1
DADP-ES-Q12-16	51,7	21,5	9	8,5	2,3	1,7	34
DADP-ES-Q12-25	64,6	24,8	9,2	10,8	2,5	2,3	43,5

Dimensions

Dimensions – Stop kit DADP-ES-Q12-32 ... 40 Download CAD data www.festo.com

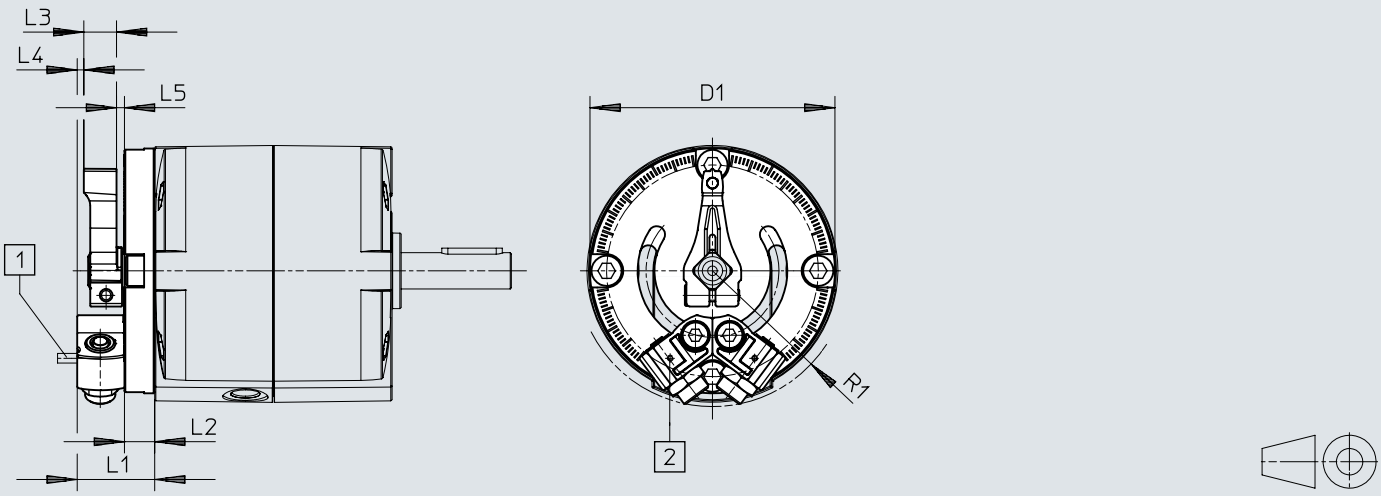

[1] Stop
[2] Mounting thread for sensor bracket

	D1 ø	L1	L2	L3	L4	L5	R1
DADP-ES-Q12-32	81	25,6	10	10,8	2,2	2,6	45,5
DADP-ES-Q12-40	100	32	12	13,7	3,3	3	58

Dimensions

Dimensions – Stop kit DADP-ES-Q12 - Swivel movement Download CAD data www.festo.com

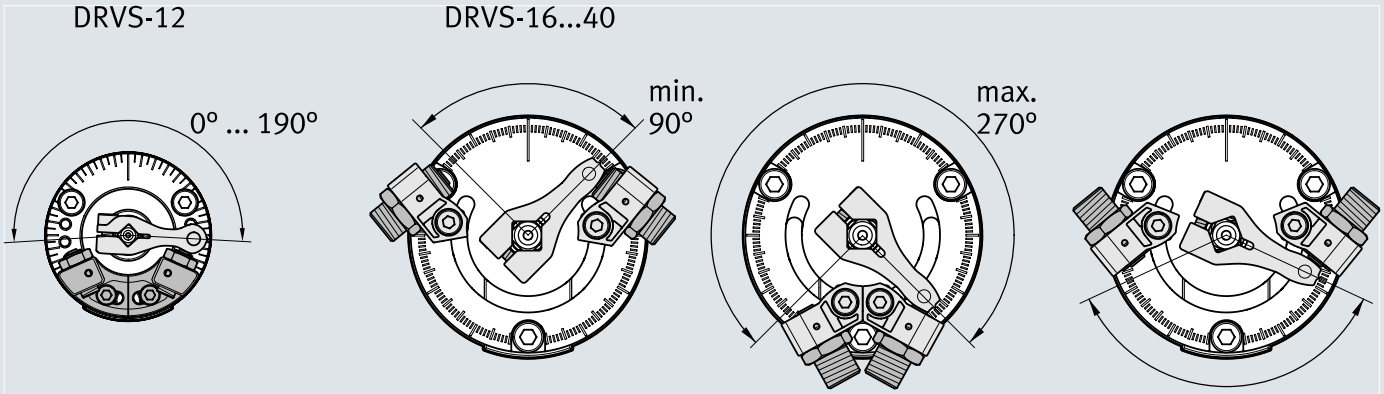

[1] For an even swivel motion it is recommended to position the stops symmetrically to the mid-position.

Dimensions

Dimensions – Stop kit DADP-ES-Q12 – Swivel angle in combination with attached proximity switches

Download CAD data www.festo.com

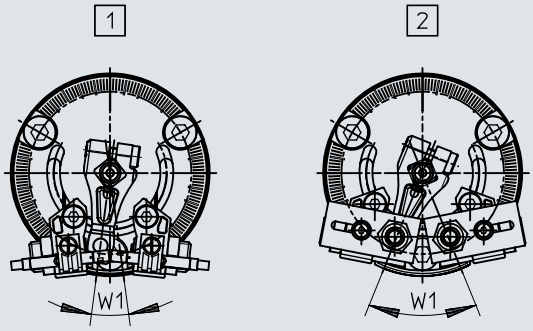

[1] With proximity switch SME-10/SMT-10
[2] With proximity switch SIEN-M5/SIEN-M8

	W1	
	1)	2)
DADP-ES-Q12-12	15°	60°
DADP-ES-Q12-16		45°
DADP-ES-Q12-25		20°
DADP-ES-Q12-32		
DADP-ES-Q12-40		15°

1) With proximity switch SME-10/SMT-10
2) With proximity switch SIEN-M5/SIEN-M8

Ordering data

DRVS without ATEX certification

	Size	Nominal swivel angle [°]	Pneumatic connection	Part no.	Type
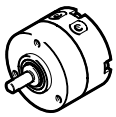	6	90 deg	M3	**1845706**	**DRVS-6-90-P**
		180 deg		**1845707**	**DRVS-6-180-P**
	8	90 deg		**1845708**	**DRVS-8-90-P**
		180 deg		**1845709**	**DRVS-8-180-P**

DRVS without ATEX certification

	Size	Nominal swivel angle [°]	Pneumatic connection	Part no.	Type
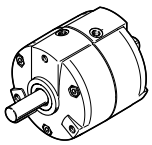	12	90 deg	M5	**1845710**	**DRVS-12-90-P**
		180 deg		**1845711**	**DRVS-12-180-P**
		270 deg		**1845712**	**DRVS-12-270-P**
	16	90 deg		**1845713**	**DRVS-16-90-P**
		180 deg		**1845714**	**DRVS-16-180-P**
		270 deg		**1845715**	**DRVS-16-270-P**

DRVS without ATEX certification

	Size	Nominal swivel angle [°]	Pneumatic connection	Part no.	Type
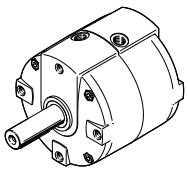	25	90 deg	M5	**1845716**	**DRVS-25-90-P**
		180 deg		**1845717**	**DRVS-25-180-P**
		270 deg		**1845718**	**DRVS-25-270-P**
	32	90 deg	G1/8	**1845719**	**DRVS-32-90-P**
		180 deg		**1845720**	**DRVS-32-180-P**
		270 deg		**1845721**	**DRVS-32-270-P**
	40	90 deg		**1845722**	**DRVS-40-90-P**
		180 deg		**1845723**	**DRVS-40-180-P**
		270 deg		**1845724**	**DRVS-40-270-P**

DRVS with ATEX certification

	Size	Nominal swivel angle [°]	Pneumatic connection	Part no.	Type
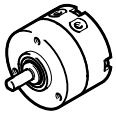	6	90 deg	M3	**2536483**	**DRVS-6-90-P-EX4**
		180 deg		**2536484**	**DRVS-6-180-P-EX4**
	8	90 deg		**2536485**	**DRVS-8-90-P-EX4**
		180 deg		**2536486**	**DRVS-8-180-P-EX4**

DRVS with ATEX certification

	Size	Nominal swivel angle [°]	Pneumatic connection	Part no.	Type
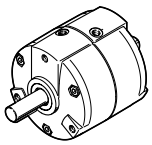	12	90 deg	M5	**2536487**	**DRVS-12-90-P-EX4**
		180 deg		**2536488**	**DRVS-12-180-P-EX4**
		270 deg		**2536489**	**DRVS-12-270-P-EX4**
	16	90 deg		**2536490**	**DRVS-16-90-P-EX4**
		180 deg		**2536491**	**DRVS-16-180-P-EX4**
		270 deg		**2536492**	**DRVS-16-270-P-EX4**

DRVS with ATEX certification

	Size	Nominal swivel angle [°]	Pneumatic connection	Part no.	Type
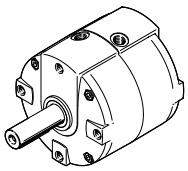	25	90 deg	M5	**2536493**	**DRVS-25-90-P-EX4**

Ordering data

DRVS with ATEX certification

	Size	Nominal swivel angle [°]	Pneumatic connection	Part no.	Type
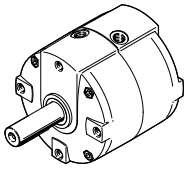	25	180 deg	M5	**2536494**	**DRVS-25-180-P-EX4**
		270 deg		**2536495**	**DRVS-25-270-P-EX4**
	32	90 deg	G1/8	**2536496**	**DRVS-32-90-P-EX4**
		180 deg		**2536497**	**DRVS-32-180-P-EX4**
		270 deg		**2536498**	**DRVS-32-270-P-EX4**
	40	90 deg		**2536499**	**DRVS-40-90-P-EX4**
		180 deg		**2536500**	**DRVS-40-180-P-EX4**
		270 deg		**2536501**	**DRVS-40-270-P-EX4**

Peripherals

DRVS-6 ... 8

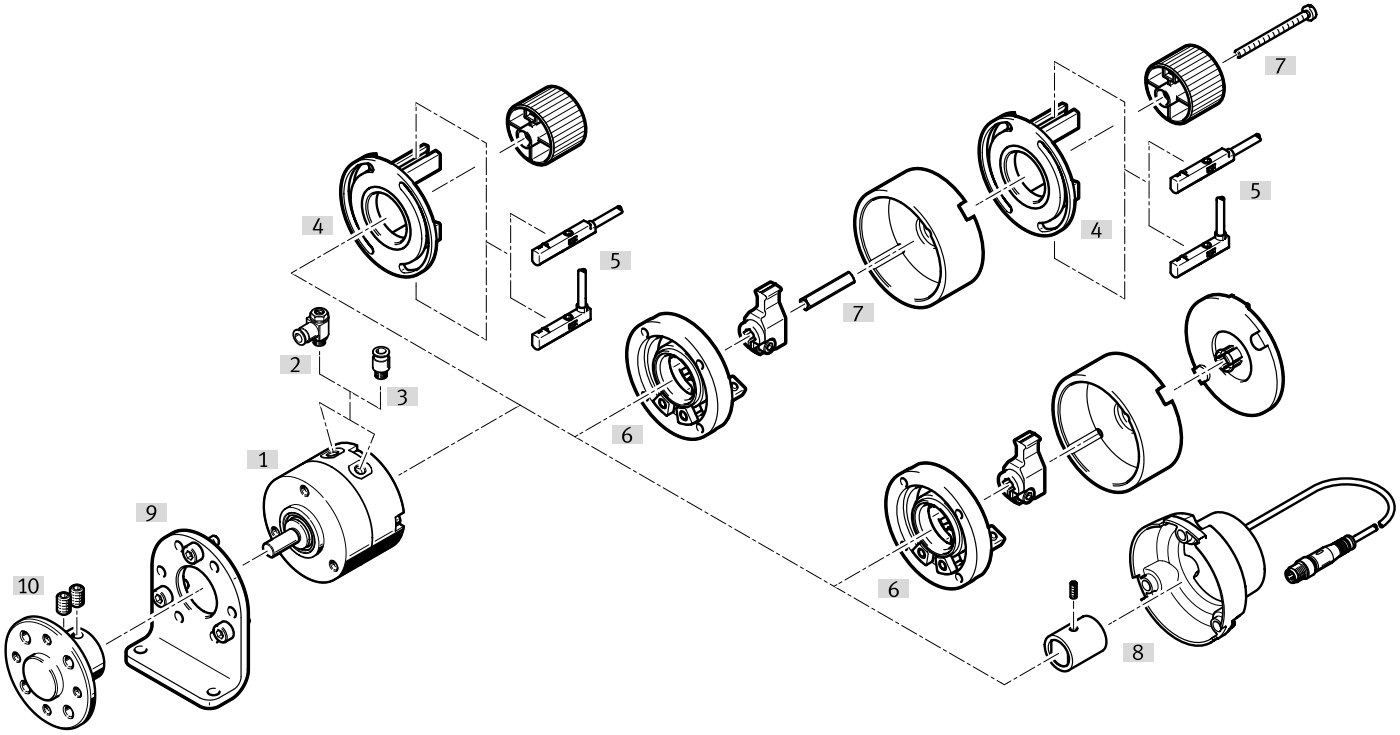

Accessories			→ Link
	Type/order code	Description	
[1]	Semi-rotary drive DRVS	Semi-rotary drive	drvs
[2]	One-way flow control valve GRLA	For regulating speed	40
[3]	Push-in fitting QS	For connecting tubing with standard O.D.	qs
[4]	Mounting kit WSM	• For sensing the swivel angle • For mounting the proximity switches SME-/SMT-10 • Must be ordered separately as accessories • Can be combined with stop kit KSM • The adapter kit DADP-AK must also be ordered in combination with the stop kit KSM	37
[5]	Proximity switch SME/SMT	For sensing the end position	40
[6]	Stop kit KSM	• To adjust the swivel angle • Must be ordered separately as accessories • Can be combined with mounting kit WSM • The adapter kit DADP-AK must also be ordered in combination with the mounting kit WSM	37
[7]	Adapter kit DADP-AK	For attaching the mounting kit WSM to the stop kit KSM	38
[8]	Position sensor SRBS	• For sensing the swivel angle • For mounting directly on the quarter-turn actuator • Must be ordered separately as accessories • The scope of delivery of the position sensor includes a magnet, which must be mounted on the shaft of the quarter-turn actuator	38
[9]	Foot mounting DAMH	• For mounting the semi-rotary drive • Front mounting only	37
[10]	Push-on flange FWSR	For mounting attachments	37

Peripherals

DRVS-12 ... 40

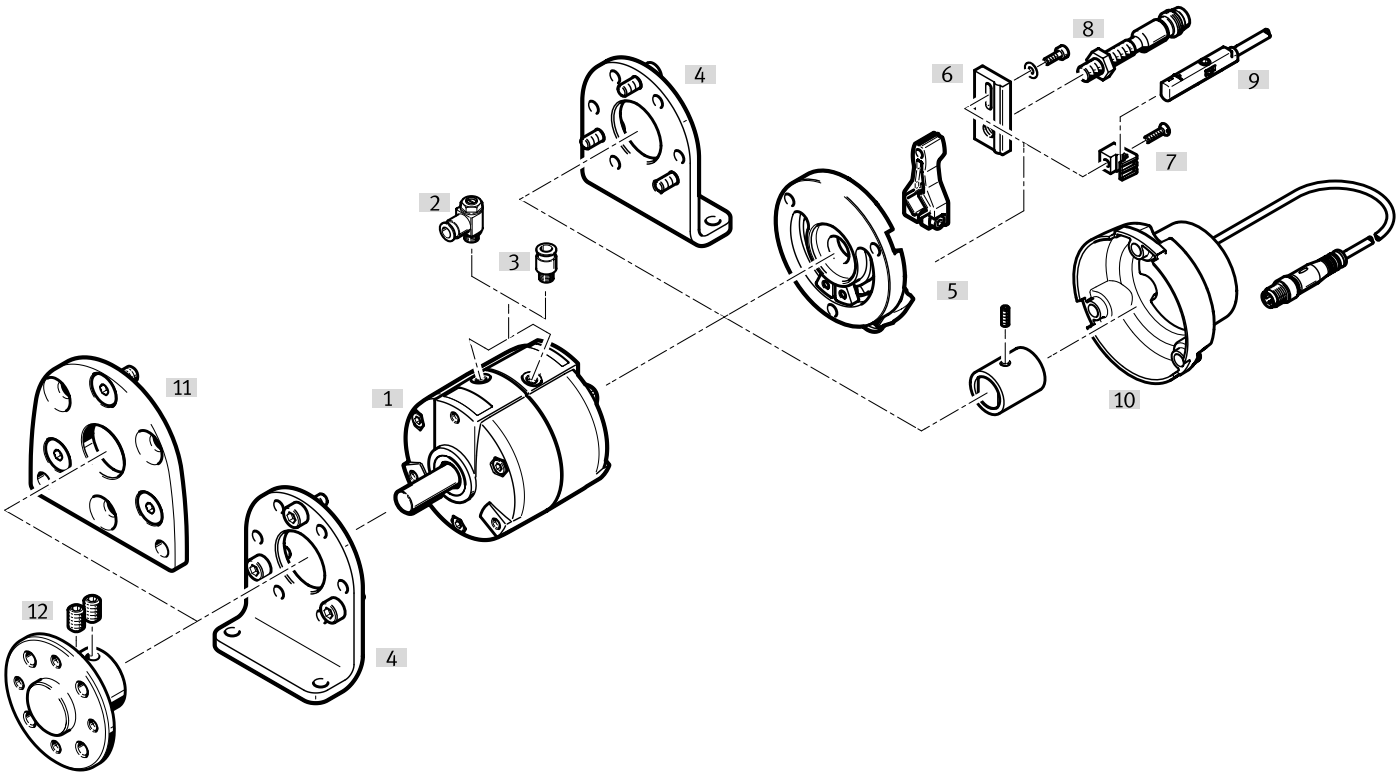

Accessories			→ Link
	Type/order code	Description	
[1]	Semi-rotary drive DRVS	Semi-rotary drive	drvs
[2]	One-way flow control valve GRLA	For regulating speed	41
[3]	Push-in fitting QS	For connecting tubing with standard O.D.	qs
[4]	Foot mounting DAMH	• For mounting the quarter-turn actuator • Can be mounted on one or both sides	37
[5]	Stop kit DADP-ES	• For adjusting the swivel angle • Must be ordered separately as accessories	39
[6]	Sensor bracket SL-DSM-S	For mounting the round inductive proximity sensors SIEN	39
[7]	Sensor bracket SL-DSM-B	For mounting the proximity switches SME/SMT-10	39
[8]	Proximity switch SIEN	For sensing the end position	40
[9]	Proximity switch SME/SMT	For sensing the end position	40
[10]	Position sensor SRBS	• For sensing the swivel angle • For mounting directly on the quarter-turn actuator • Must be ordered separately as accessories • The scope of delivery of the position sensor includes a magnet, which must be mounted on the shaft of the quarter-turn actuator	38
[11]	Flange mounting DAMF	For mounting the semi-rotary drive on the front using two mounting holes	37
[12]	Push-on flange DARF	For mounting attachments	37

Accessories

Foot mounting DAMH

	Description [1]	Material bracket	Product weight [2]	Part no.	Type
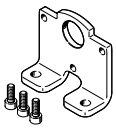	For size 6, foot mounting can only be fitted at the front	Galvanised steel	27 g	**3371840**	**DAMH-Q12-6**
	For size 8, foot mounting can only be fitted at the front		40 g	**3371841**	**DAMH-Q12-8**
	For size 12		79 g	**3371842**	**DAMH-Q12-12**
	For size 16		111 g	**3371843**	**DAMH-Q12-16**
	For size 25		203 g	**3371844**	**DAMH-Q12-25**
	For size 32		287 g	**3371845**	**DAMH-Q12-32**
	For size 40		529 g	**3371846**	**DAMH-Q12-40**

1) Suitable for ATEX

2) For a foot mounting

Flange mounting DAMF

	Description [1]	Material mounting	Product weight	Part no.	Type
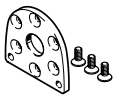	For size 12	Galvanised steel	54 g	**4965018**	**DAMF-Q12-12**
	For size 16		80 g	**4965019**	**DAMF-Q12-16**
	For size 25		147 g	**4965020**	**DAMF-Q12-25**
	For size 32		305 g	**4965021**	**DAMF-Q12-32**
	For size 40		472 g	**4965022**	**DAMF-Q12-40**

1) Suitable for ATEX

Push-on flange FWSR Link fwsr

	Description	Material housing	Product weight	Part no.	Type
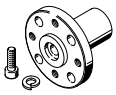	For size 6	Wrought aluminium alloy	5 g	**185948**	**FWSR-6**
	For size 8		7 g	**185949**	**FWSR-8**

Push-on flange DARF Link darf

	Description [1]	Material flange	Product weight	Part no.	Type
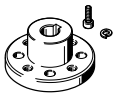	For size 12	Anodised wrought aluminium alloy	15 g	**4886221**	**DARF-Q12-12**
	For size 16		25 g	**4886222**	**DARF-Q12-16**
	For size 25		60 g	**4886223**	**DARF-Q12-25**
	For size 32		92 g	**4886224**	**DARF-Q12-32**
	For size 40		155 g	**4886225**	**DARF-Q12-40**

1) Suitable for ATEX

Stop kit KSM Link ksm

	Description [1]	Material housing	Product weight	Part no.	Type
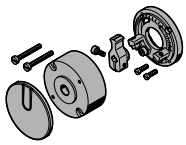	For size 6, for adjusting the swivel angle	Aluminium, Anodised	30 g	**175833**	**KSM-6**
	For size 8, for adjusting the swivel angle		70 g	**175834**	**KSM-8**

1) Suitable for ATEX

Mounting kit WSM

	Description	Material retaining bracket	Product weight	Part no.	Type
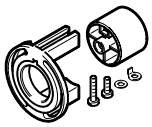	For size 6, For sensing the swivel angle; for mounting the proximity switches SME/SMT-10	Reinforced PA	12 g	**173205**	**WSM-6-SME-10**

Accessories

Mounting kit WSM

	Description	Material retaining bracket	Product weight	Part no.	Type
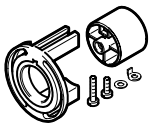	For size 8, For sensing the swivel angle; for mounting the proximity switches SME/SMT-10	Reinforced PA	13 g	**173206**	**WSM-8-SME-10**

Adapter kit DADP-AK

	Description	Material adapter	Product weight	Part no.	Type
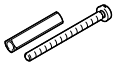	For size 6, For attaching the mounting kit WSM on the stop kit KSM	Galvanised steel	2 g	**3617044**	**DADP-AK-Q1-6**
	For size 8, For attaching the mounting kit WSM on the stop kit KSM		3 g	**3617045**	**DADP-AK-Q1-8**

Position sensor SRBS

Link srbs

	Description	Switching element function [1]	Switching output	Sensing range	Part no.	Type
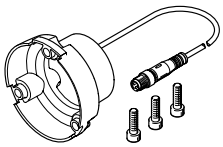	For size 6, for mounting directly on the actuator	N/C or N/O contact, switchable	2 x PNP or 2 x NPN, switchable	270 deg	**2619969**	**SRBS-Q12-6-E270-EP-1-S-M8**
	For size 8, for mounting directly on the actuator				**2619972**	**SRBS-Q12-8-E270-EP-1-S-M8**
	For size 12, for mounting directly on the actuator				**2393546**	**SRBS-Q12-12-E270-EP-1-S-M8**
	For size 16, for mounting directly on the actuator				**2393547**	**SRBS-Q12-16-E270-EP-1-S-M8**
	For size 25, for mounting directly on the actuator				**2393548**	**SRBS-Q12-25-E270-EP-1-S-M8**
	For size 32, for mounting directly on the actuator				**2393549**	**SRBS-Q12-32-E270-EP-1-S-M8**
	For size 40, for mounting directly on the actuator				**2393550**	**SRBS-Q12-40-E270-EP-1-S-M8**

1) Sturdy, contactless and encapsulated position sensing with long service life:
- To sense the end positions
- Simple and reliable operation using one button
- Only one connecting cable needed

Connecting cables NEBA, straight – for position sensor SRBS

	Electrical connection 1, connector system	Electrical connection 2, connector system	Electrical connection 2, number of connections/cores	Cable length	Part no.	Type
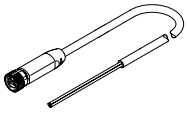	M8x1, A-coded, to EN 61076-2-104	M8x1, A-coded to EN 61076-2-104	4	2.5 m	**8078295**	**NEBA-M8G4-U-2.5-N-M8G4**
		Open end			**8078227**	**NEBA-M8G4-U-2.5-N-LE4**
				5 m	**8078228**	**NEBA-M8G4-U-5-N-LE4**

Accessories

Stop kit DADP-ES — Link dadp-es

	Description [1]	Material disc	Product weight	Part no.	Type
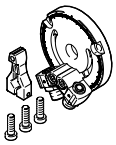	For size 12, for adjusting the swivel angle	Anodised wrought aluminium alloy	60 g	**2536502**	**DADP-ES-Q12-12**
	For size 16, for adjusting the swivel angle		110 g	**2536503**	**DADP-ES-Q12-16**
	For size 25, for adjusting the swivel angle		180 g	**2536504**	**DADP-ES-Q12-25**
	For size 32, for adjusting the swivel angle		250 g	**2536505**	**DADP-ES-Q12-32**
	For size 40, for adjusting the swivel angle		450 g	**2536506**	**DADP-ES-Q12-40**

1) Suitable for ATEX

Sensor bracket SL-DSM-B

	Description	Material retaining bracket	Product weight	Part no.	Type
	For size 12 ... 40, For mounting the proximity switches SIEN-M5, For sensing the swivel angle	Reinforced PA	2 g	**550661**	**SL-DSM-B**

Sensor bracket SL-DSM-S-...-B

	Description	Material retaining bracket	Product weight	Part no.	Type
	For size 12 ... 40, For mounting the proximity switches SIEN-M8, For sensing the swivel angle	Aluminium	4 g	**1132360**	**SL-DSM-S-M8-B**
	For size 12 ... 40, For mounting the proximity switches SIEN-M5, For sensing the swivel angle			**1130882**	**SL-DSM-S-M5-B**

Proximity switch SMT for round slot, magneto-resistive – for DRVS-6 ... 40 — Link smt

	Type of mounting [1]	Switching output	Electrical connection	Cable length	Part no.	Type
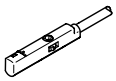	Screw-clamped, Insertable in the slot from above	3-wire PNP N/O contact	Open end	2.5 m	**551373**	**SMT-10M-PS-24V-E-2,5-L-OE**
			Plug M8, A-coded	0.3 m	**551375**	**SMT-10M-PS-24V-E-0,3-L-M8D**

1) For DRVS-6 ... 8: With mounting kit WSM-...-SME-10
For DRVS-12 ... 40: Attached to the DRVS with sensor bracket SL-DSM-B

Proximity switch SME for round slot, magnetic reed – for DRVS-6 ... 40 — Link sme

	Type of mounting [1]	Switching element function	Electrical connection	Cable length	Part no.	Type
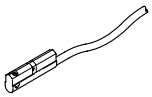	Clamped in C-slot, Insertable in the slot lengthwise	N/O contact	Open end	0.3 m	**173212**	**SME-10-SL-LED-24**
				2.5 m	**173210**	**SME-10-KL-LED-24**

1) For DRVS-6 ... 8: With mounting kit WSM-...-SME-10
For DRVS-12 ... 40: With sensor bracket SL-DSM-B

Accessories

Proximity switch SME for round slot, magnetic reed – for DRVS-6 ... 40 Link sme

	Type of mounting [1]	Switching output	Electrical connection	Cable length	Part no.	Type
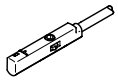	Screw-clamped, Insertable in the slot from above	3-wire N/O contact	Open end	2.5 m	551365	SME-10M-DS-24V-E-2,5-L-OE
			Plug M8, A-coded	0.3 m	551367	SME-10M-DS-24V-E-0,3-L-M8D

1) With sensor bracket SL-DSM-B

Proximity switch SIEN, inductive, with cable – for DRVS-12 ... 40 Link sien

	Type of mounting [1]	Switching output	Electrical connection	Cable length	Part no.	Type
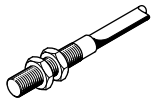	Via lock nut	PNP	Open end	2.5 m	150386	SIEN-M8B-PS-K-L
					150370	SIEN-M5B-PS-K-L

1) With sensor bracket SL-DSM-S

Proximity switch SIEN, inductive, without cable – for DRVS-12 ... 40 Link sien

	Type of mounting [1]	Switching output	Electrical connection	Part no.	Type
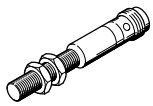	Via lock nut	PNP	Plug M8, A-coded	150387	SIEN-M8B-PS-S-L
				150371	SIEN-M5B-PS-S-L

1) With sensor bracket SL-DSM-S

Connecting cables NEBA, straight

	Electrical connection 1, connector system	Electrical connection 2, connector system	Electrical connection 2, number of connections/cores	Cable length	Part no.	Type
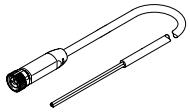	M8x1, A-coded, to EN 61076-2-104	Open end	3	2.5 m	8078223	NEBA-M8G3-U-2.5-N-LE3
				5 m	8078224	NEBA-M8G3-U-5-N-LE3

Connecting cables NEBA, angled

	Electrical connection 1, connector system	Electrical connection 2, connector system	Electrical connection 2, number of connections/cores	Cable length	Part no.	Type
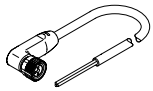	M8x1, A-coded, to EN 61076-2-104	Open end	3	2.5 m	8078230	NEBA-M8W3-U-2.5-N-LE3
				5 m	8078231	NEBA-M8W3-U-5-N-LE3

One-way flow control valves GRLA

	Description	Pneumatic connection 1	Pneumatic connection, port 2	Product weight	Part no.	Type
	For size 6, 8; Metal design	Push-in connector 3 mm	M3	7 g	175041	GRLA-M3-QS-3
	For size 12, 16, 25; Metal design		M5	13 g	193137	GRLA-M5-QS-3-D
		Push-in connector 4 mm			193138	GRLA-M5-QS-4-D
	For size 32, 40; Metal design	Push-in connector 3 mm	G1/8	22 g	193142	GRLA-1/8-QS-3-D

Accessories

One-way flow control valves GRLA

	Description	Pneumatic connection 1	Pneumatic connection, port 2	Product weight	Part no.	Type
	For size 32, 40; Metal design	Push-in connector 4 mm	G1/8	22 g	**193143**	**GRLA-1/8-QS-4-D**
		Push-in connector 6 mm			**193144**	**GRLA-1/8-QS-6-D**
		Push-in connector 8 mm			**193145**	**GRLA-1/8-QS-8-D**